Increasing Network Efficiency by Combining Ethernet/TSN Standards

Don Pannell

Fellow
Automotive Ethernet Networking

Oct 2018 | IP Tech Day - London

SECURE CONNECTIONS FOR A SMARTER WORLD

Agenda

- Overview
- Better Network Utilization
- Synchronous Cut-Through
- Asynchronous Cut-Through
- TDM Collision Avoidance
- Shared Media QoS
- Summary

A Leading Contributor to High Speed Networking Standards

- **NXP is a contributing member of**
  - **IEEE Ethernet Workgroups**
    - 802.3 – 10BASE-T1S, 100BASE-T1, 1000BASE-T1 and 2.5/5/10Gbps
    - 802.1 – TSN
  - **OPEN Alliance – Co-Founder**
    - Member Steering Committee
    - Leading member of Technical Committees
      - TC-9 (1000BASE-T1 UTP channel specification)
      - TC-10 (Sleep/Wake-up Specification & IOPT for Automotive Ethernet 1000BASE-T1)
      - TC-12 (1000BASE-T1 PHY interoperability and EMC specs)
  - **MIPI Automotive Workgroup**
    - Automotive SerDes Special Interest Group
    - Driving specification for MIPI BoF and MIPI Auto WG

Overview

- Many people are aware of the IEEE 802.1 TSN & 802.3 PHY STDs
- These standards offer many “Tools in a Toolbox” to choose from
- This presentation goes beyond the individual standards and shows benefits of combining some of the 802.3 & 802.1 standards together

- Many of these combinations require new work on the part of the IEEE 802 groups (as noted in the presentation)
  - While most of these combinations are not standardized today – they are all being worked on, so, if you see something interesting, please support that standardization effort
- This very early preview demonstrates the versatility of the IEEE standards and shows that improvements are an ongoing process
  - After all, IEEE 802 became 38 years old March 2018

Overview

Example combinations that are examined:

Selected 802.3 & 802.1 TSN work:	Combined Effect:
Preemption + Qbv	Better Network Utilization
Cut-Through (new) + Qbv	Synchronous Cut-Through
Cut-Through (new) + Preemption	Asynchronous Cut-Through
10BASE-T1S (in process) + Qbv	TDM Collision Avoidance
10BASE-T1S (in process) + Priorities (new)	Shared Media QoS

“new” means: Topics are in active discussions between IEEE 802.1 and 802.3

Preemption + Qbv = Better Network Utilization

Preemption + Qbv = Better Network Utilization

- Qbv, otherwise known as the Time Aware Shaper, is used to get the lowest possible latency through a Bridge for those few critical flows
  - Qbv does this by removing lower priority flow interference by blocking those flows ahead of the scheduled times when the critical flows are expected
- This blocking causes a cost in Network Utilization to the other flows
  - Without Preemption, the blocking must Guardband for a max frame size (1522 bytes)
  - With Preemption, the Guardband's size can be reduced to as small as 128 bytes
  - This is a network utilization savings of ~1350 bytes times per Qbv blocking event
- Preemption + Qbv allows for more flexible Qbv schedules
  - Without this some max size frames could be delayed until a large enough gap exists
- Qbv supports an option to start Preemption during each Guardband

Qbv without & with Preemption – A Comparison

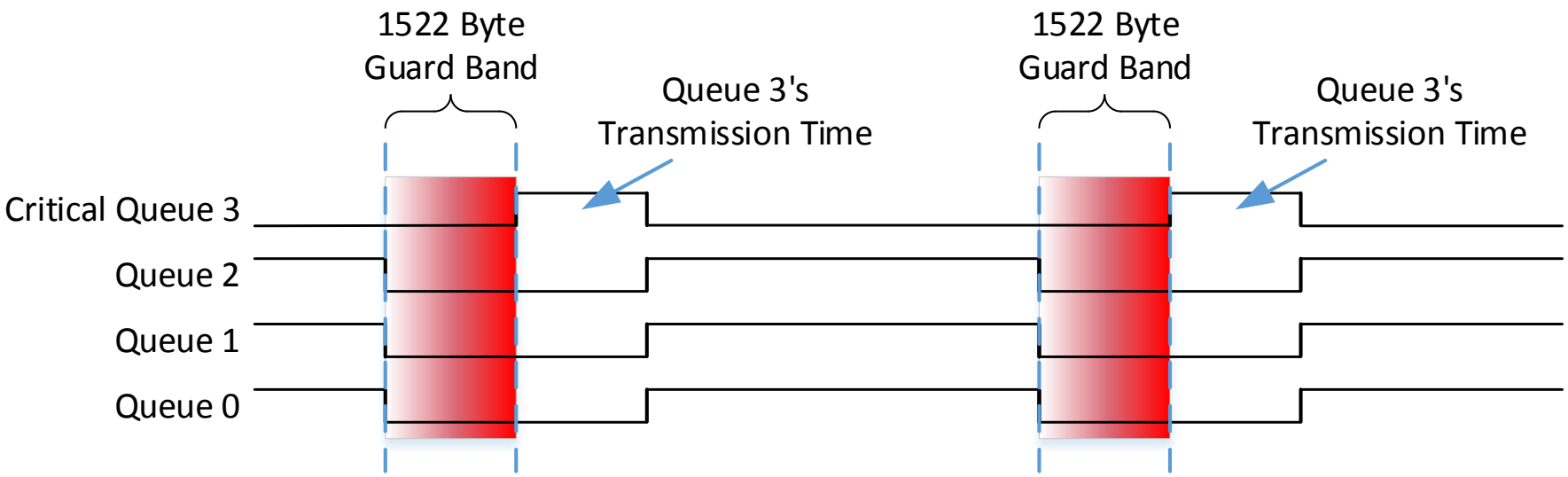

The Qbv Standard allows non-critical frames to be transmitted in the Guard Band, but only if they complete before the end of the Guard Band. This greatly limits utility of this time.

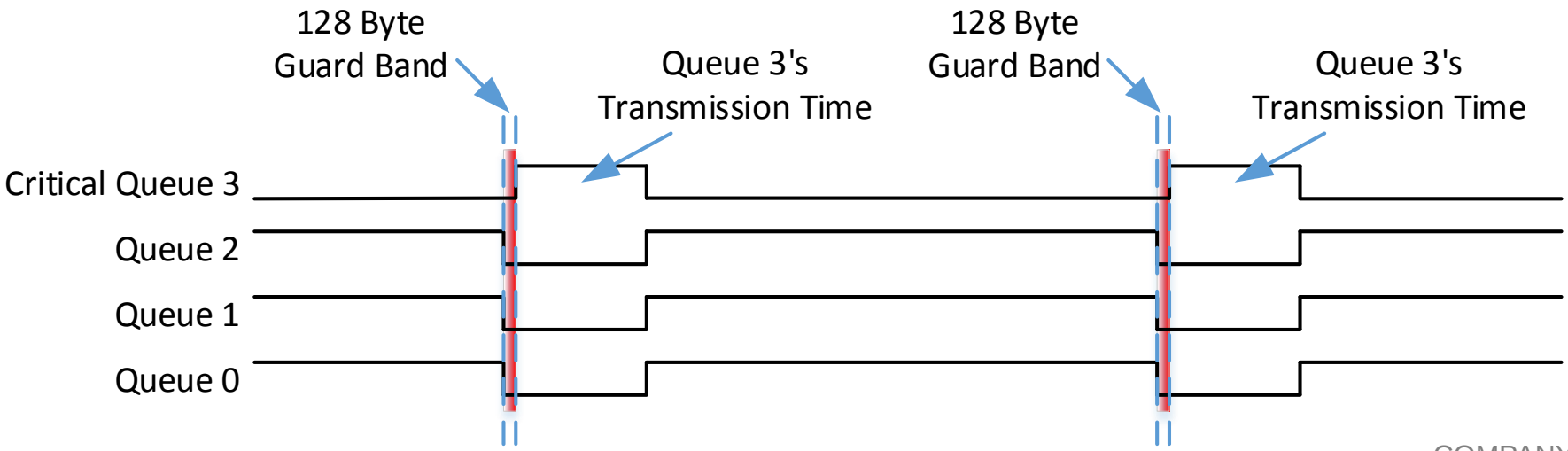

With Preemption ALL the time up to the start of the Guard Band can be used by non-critical frames. A preempted frame then continues after it's Queue re-opens.

Cut-Through (new work) + Qbv = Synchronous Cut-Through

Cut-Through + Qbv = Synchronous Cut-Through

- Qbv, the Time Aware Shaper, delivers its lowest possible latency in a Bridge when it is combined with Cut-Through
  - See http://www.ieee802.org/1/files/public/docs2011/new-pannell-latency-options-0311-v1.pdf
- Cut-Through is a well used & proven technique implemented in Industrial Networks that significantly lowers Bridge latency
  - This is accomplished by allowing a Bridge to start transmitting a frame out a port before the entire frames has finished being received (instead of Store & Forward)
  - Since the frame's CRC is not checked, higher layer precautions are used
  - Other limitations exist, like frame modifications that increase frames size don't work
- 802.1 mentions Cut-Through is some of its TSN standards, but the document interface between 802.1 & 802.3 does not support it
  - The Cut-Through topic is in active discussions in 802.1 & 802.3 to resolve this

Synchronous Cut-Through vs. Qbv – A Comparison

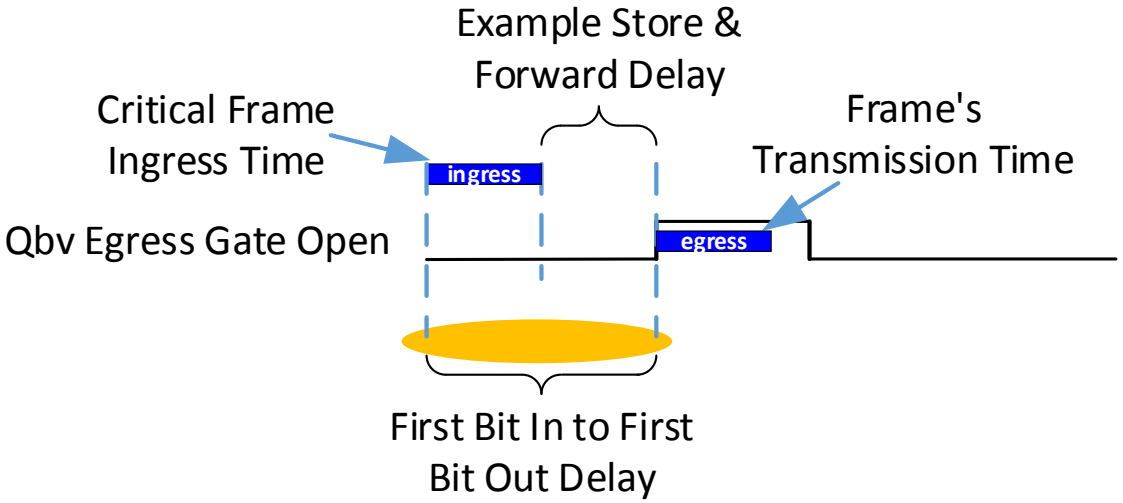

Bridges have Store & Forward delays (last bit it to first bit out). The frame can't start to egress if this processing delay has not completed.

With Qbv there are no interfering frames, so the hop latency (first bit in to first bit out) is the frame's size + the Store & Forward delay.

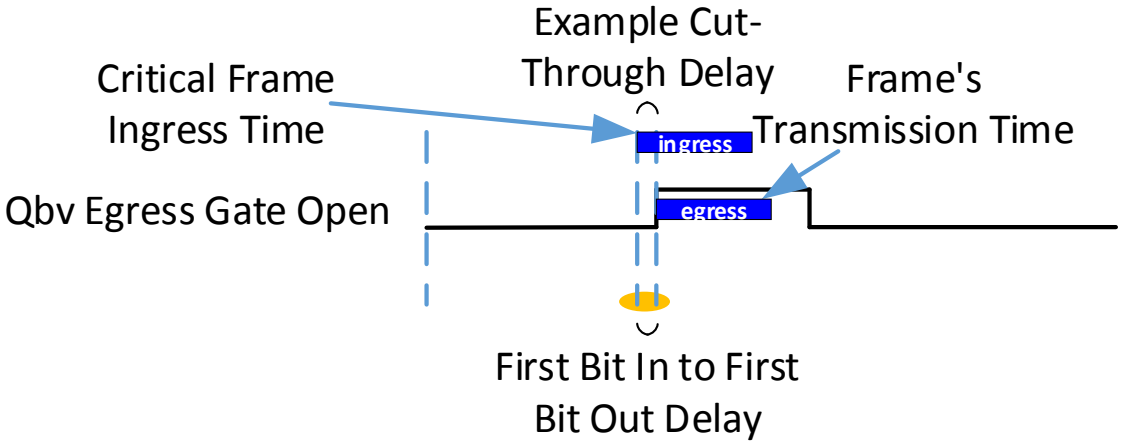

Bridges have Cut-Through delays (first bit it to first bit out). The frame can start to egress as soon as this processing delay has completed (and the output is idle).

With Qbv the output is guaranteed to be idle, so the hop latency (first bit in to first bit out) is the Cut-Through delay only!

Cut-Through (new work) + Preemption = Asynchronous Cut-Through

Cut-Through + Preemption = Asynchronous Cut-Through

- Cut-Through was not as interesting before Qbv because Cut-Through's performance couldn't be guaranteed – with Qbv it can be
  - This works for systems already using Qbv
- Combining Preemption with Cut-Through allows Cut-Through performance without needing to create a Qbv schedule
  - Thus the name Asynchronous Cut-Through
- Since Preemption of a stream can't start until the arrival of a frame that needs to be Cut-Through, the Bridge latency is a bit larger
  - Need to add 2x the Preemption Fragment Size per hop (minimum of 128 byte times)
- Again, the Cut-Through topic is in active discussions in 802.1 & 802.3 to allow its official support in the standards

Asynchronous Cut-Through – It's Latency Savings

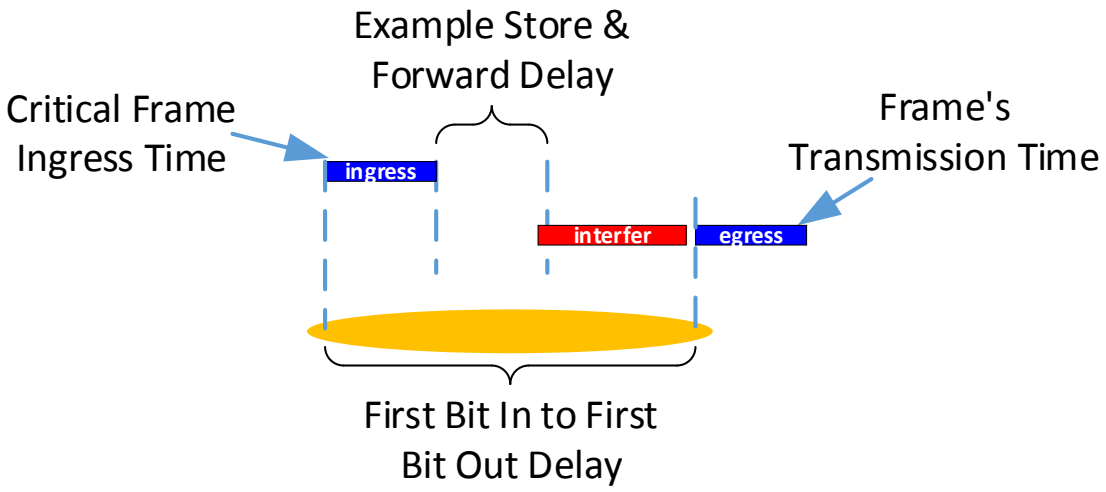

Bridges have Store & Forward delays (last bit it to first bit out). The frame can't start to egress if this processing delay has not completed.

Without Qbv there can be at least one interfering frame, so the hop latency (first bit in to first bit out) is the frame's size + the size of the interfering frame + the Store & Forward delay.

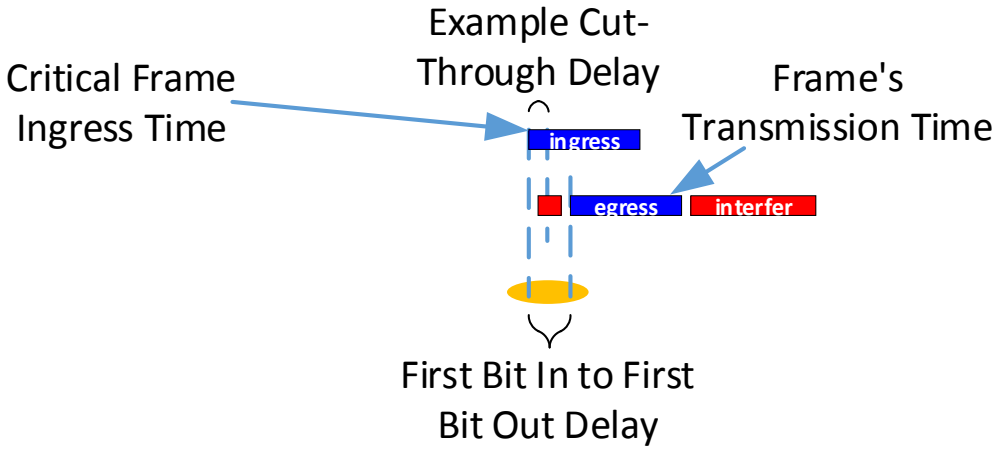

Bridges have Cut-Through delays (first bit it to first bit out). The frame can start to egress as soon as this processing delay has completed (and the output is idle).

With Preemption even if the output is busy the preemption processing delay can start which splits the Red frame into two parts. So the hop latency (first bit in to first bit out) is the Cut-Through delay + the preemption delay!

10BASE-T1S (in process) + Qbv = TDM Collision Avoidance

10BASE-T1S + Qbv = TDM Collision Avoidance

- 10BASE-T1S supports a shared media mode called multi-drop
- Since a new MAC was not part of the project, it appeared it would be connected to the original half-duplex CSMA/CD MAC
  - But this MAC is not deterministic, a requirement of Time Sensitive Networking (TSN)
- Research was done to see if Qbv, the Time Aware Shaper could be used to avoid collisions on the media & gain determinism
  - This was prototyped with both 802.1AS and Qbv running on a 10Mbit/s shared media
    - See http://www.ieee802.org/1/files/public/docs2017/tsn-cgunther-tsn-for-802-3cg-1117-v02.pdf
- While this worked, and the Qbv schedule is simple, the fixed Time Division Multiplexing (TDM) wasted a lot of bandwidth, if unused
  - Since no other node could use a time slot if it was unused by it's 'owner'

10BASE-T1S (in process) + Priorities (new work) = Shared Media QoS

10BASE-T1S + Priorities = Shared Media QoS

- 10BASE-T1S supports a shared media mode called multi-drop
- To improve the performance (usable bandwidth) a PHY Level Collision Avoidance (PLCA) mechanism has been developed
- While PLCA is more bandwidth efficient compared to the 10BASE-T1S + Qbv mechanism, it does not support priorities:
  - Priority Awareness can dynamically increase the available bandwidth allocated to high priority TSN flows
  - Priorities enable Qav's bandwidth 'Catch-up' mechanism – a Key component of TSN
- Public presentations show that TSN needs to be used on these links
- Adding Priority Awareness to PLCA fixes both of these issues
  - See http://www.ieee802.org/3/cg/public/adhoc/cg-pannell-Priority-for-PLCA-0918-v05.pdf

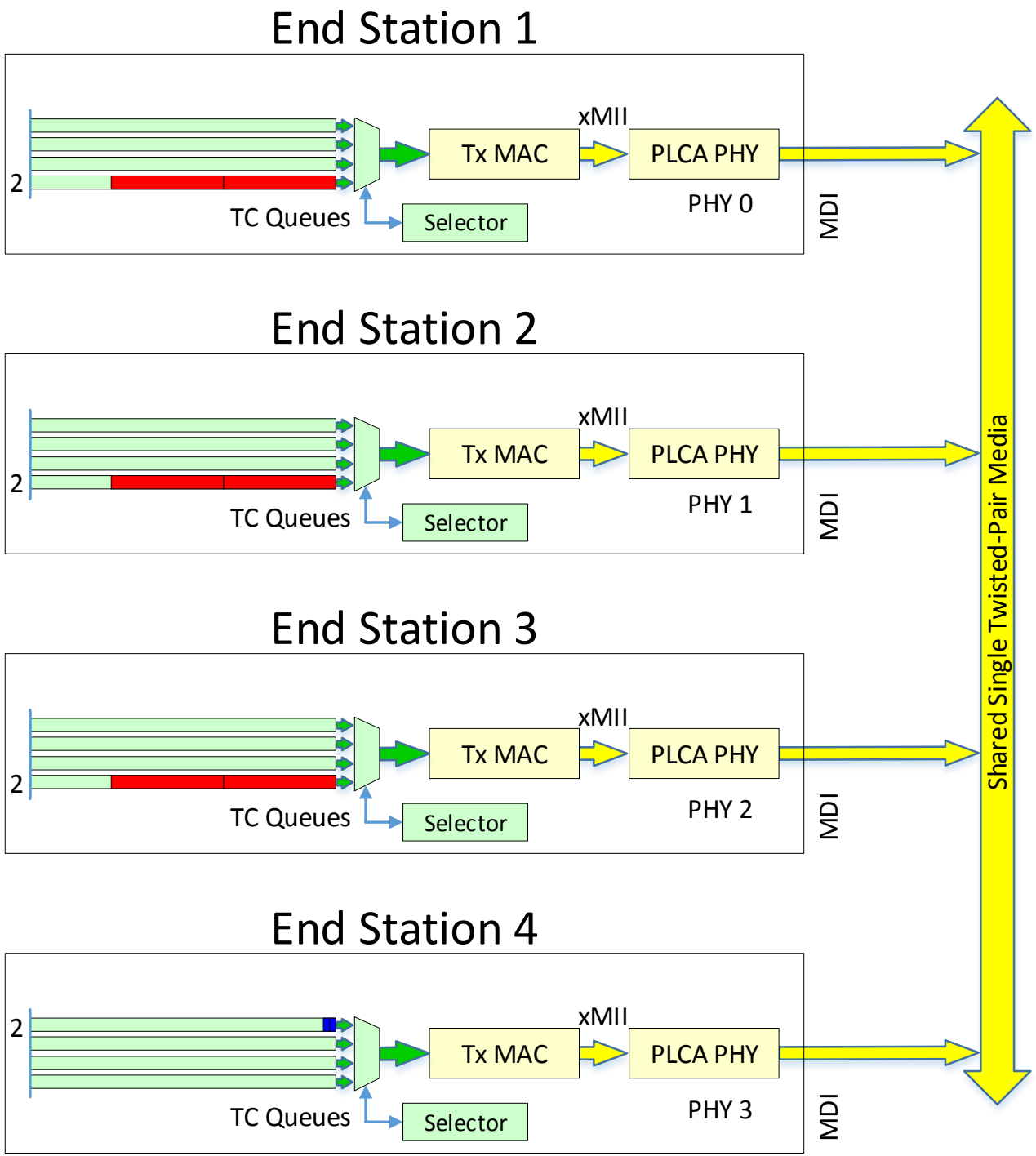

PLCA Network

Frame ordering without Priorities

PLCA gives each station a transmit opportunity per cycle PHY 0 goes first, then PHY 1, etc.

Given the situation where 3 stations have Red max size low priority frames to transmit & 1 station has Blue min size high priority TSN frames to transmit, the resulting transmission order is shown below.

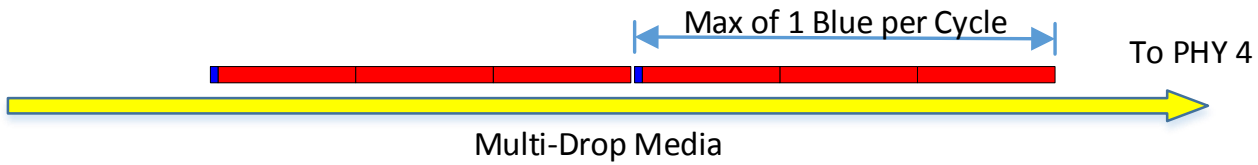

The Problem

Without priorities, Station 4 can transmit only 1 Blue frame per PLCA Cycle, where a cycle's duration is controlled by the frame sizes being transmitted by all the Stations. This limits the usable bandwidth available to high priority Blue frames.

There is no mechanism in PLCA for the high priority Blue frames to burst or 'Catch-up' when their transmission rate is greater than 1 frame per worst case cycle time (as shown).

PLCA Network

Frame ordering with Priorities

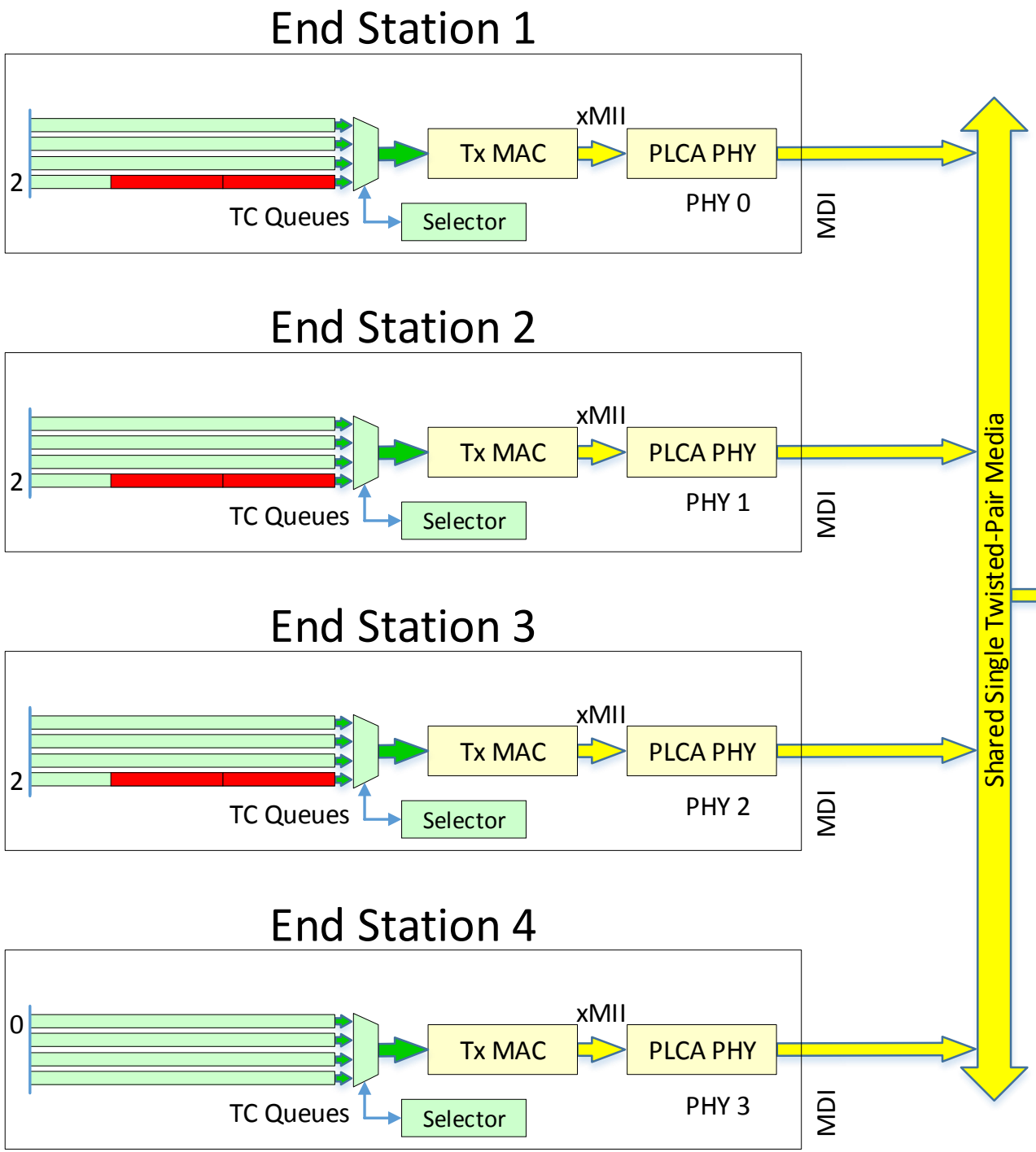

This setup adds Priority Awareness to the PLCA PHYs. In this example Station 4 starts with 0 frames, but accumulates 3 high priority Blue frames while the other station's low priority Red frames are transmitting.

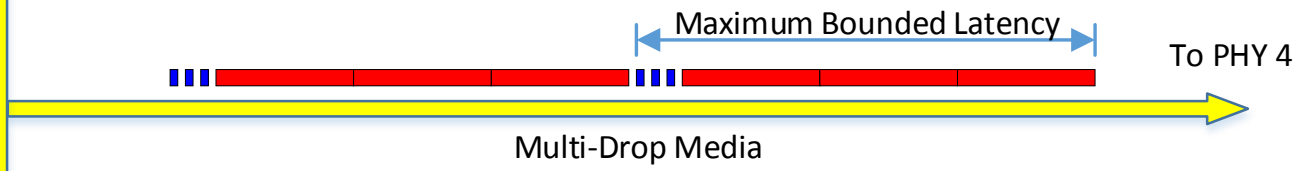

The Solution

After adding Priority Awareness to PLCA, the 802.1 Qav 'Catch-up' mechanism can work. Now when Station 4 accumulates multiple high priority Blue frames, they can be burst out! If 4 or more Blue frames accumulated – they would burst out in the same way, dynamically allocating more bandwidth to the higher priority frames as needed.

How these Priorities are communicated is under discussion.

Summary

Summary

- IEEE 802 provides “Tools in a Toolbox” that are designed, in many cases, to work together
  - 802.3 provides options for link speeds & media types, many with common interfaces
  - 802.1 provides options for QoS, Lower Latency, Better Link Utilization, etc.
- This presentation showed the benefit of combining some of these tools together – in each example, 802.3 work plus 802.1 work
  - Where some solutions are standardized today and some are being discussed
- These examples show the versatility of the IEEE 802 standards and that the people developing these standards work hard to make sure the standards work together as much as possible

IEEE 802.1 Automotive AVB and TSN Standards Handout

	Transport	Synchroni-zation	Stream Reservation	Quality of Service	Redundancy	Security
AVB 802.1BA-2009 The AVB Profile	1722-2011 Media Transport Protocol	802.1AS-2011 gPTP	802.1Qat-2010 SRP (now Q clause 35)	802.1Qav-2009 Credit Based Shaper (now Q clause 34)	-	802.1X-2010 802.1Xbx-2014 802.1Xck Network Access
TSN	1722-2016 Adds CAN, FlexRay, LIN, + more Audio/Video Transports	802.1AS-Rev Redundant gPTP	802.1Qcc-2018 Enhanced SRP 802.1Qca-2015 Path Control & Reservation	802.1Qbv-2015 Time Aware Shaper 802.1Qbu-2016 & 802.3br-2016 Preemption 802.1Qch-2017 Cyclic Queue Forwarding 802.1Qcr Asynchronous Shaping	802.1CB-2017 Frame Replication & Elimination 802.1AS-Rev Redundant gPTP	802.1Qci-2017 Policing 802.1AEcg-2017 (end-to-end) MACSec

Standards without an appended year are not completed yet.

Updated 9-2018

IEEE 802.3 Automotive Ethernet PHY Standards Handout

	10 Mbit/s	100 Mbit/s	1000 Mbit/s	2500 Mbit/s	10 Gbit/s	Next
MAC Interface Digital/ SERDES	SNI, xMII/ SGMII OC-SGMII	xMII/ SGMII OC-SGMII	xGMII/ SGMII OC-SGMII 1000BASE-X	OC-SGMII 2500BASE-X	USXGMII XFI	?
Media Interface Single Twisted Pair	802.3cg 10BASE-T1S 15m Point to Point 25m Multi-Drop 10BASE-T1L 1000m Point to Point	802.3bw-2015 100BASE-T1 15m Point to Point	802.3bp-2016 1000BASE-T1 15m Point to Point	802.3ch 2500BASE-T1 15m Point to Point	802.3ch 10GBASE-T1 15m Point to Point	?

Media Interface (PHY) Standards without an appended year are not completed yet. Updated 9-2018

SECURE CONNECTIONS
FOR A SMARTER WORLD

www.nxp.com