1000BASE-T1 from Standard to Series Production

Enabling Next Generation Scalable Architecture

Olaf Krieger (Volkswagen), Christopher Mash (Marvell)

MARVELL

Volkswagen

Agenda

- Next generation scalable network architecture
- The need for 1Gbit/s Ethernet
- Initial investigation
- Building the eco-system
- Qualification
- Summary

Next Generation Scalable Architecture

What do you expect from a smart vehicle?

- Additional features
- Support cross domain functions
- Increased application diversity for different vehicle configuration and different models
- Individualization – different features and setups on vehicles with the same hardware
- Personalization – available features and setups are linked to an individual driver account
- Upgradability – new functionality can be installed over time

Basic Concept

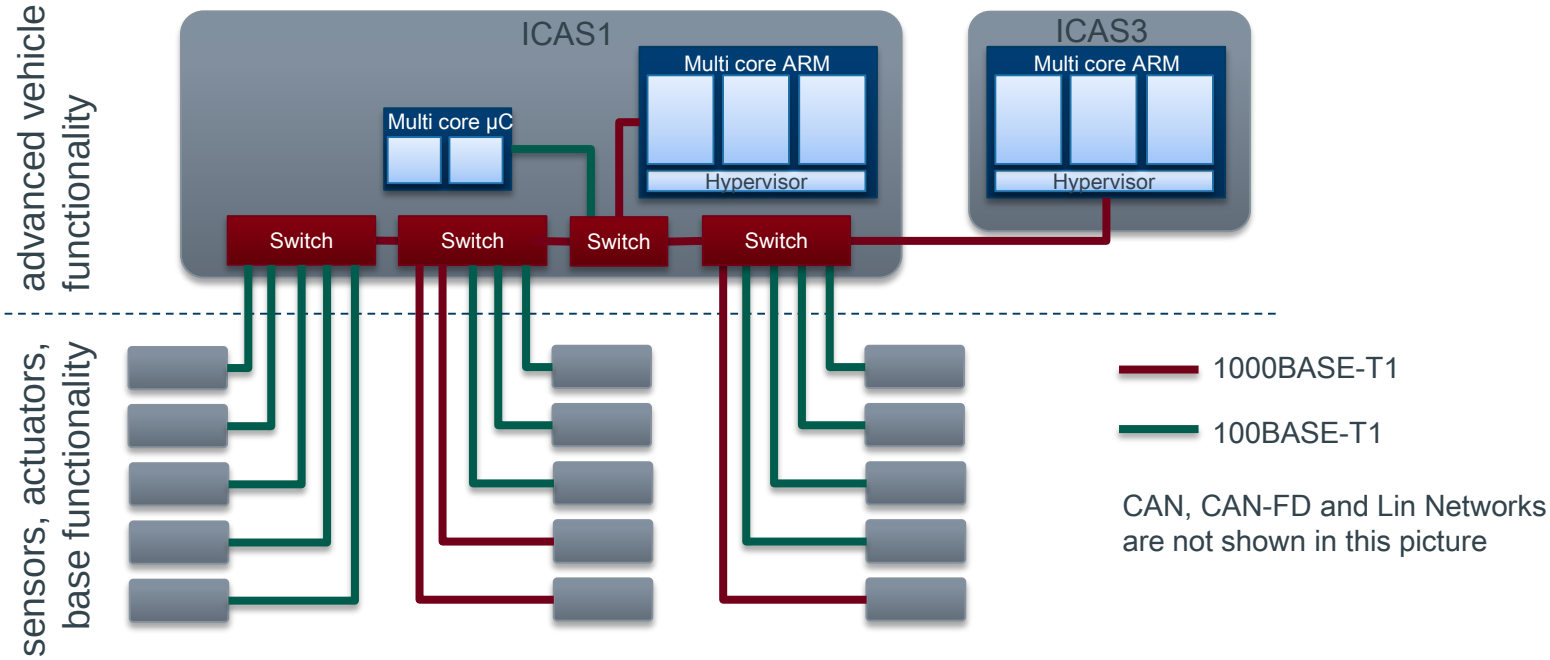

- Centralization of vehicle functionality in a few powerful ECUs called ICAS (In Car Application Server)
- Connecting sensors and actuators using powerful network technology such as Ethernet and CAN-FD to the central ECU
- Consolidation of many different functionalities in powerful ECUs using virtualization

Centralization of Functionality

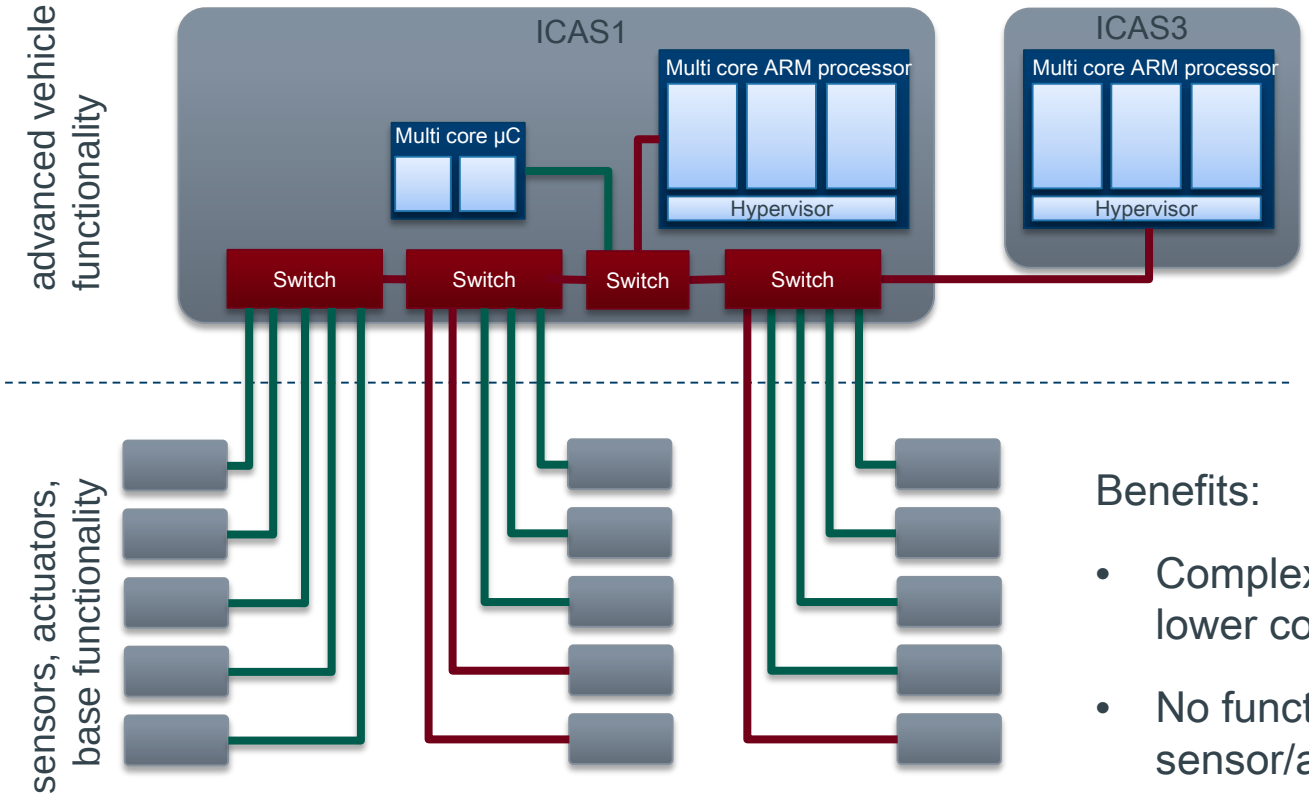

CAN, CAN-FD and Lin Networks are not shown in this picture

New requirements:

- High performance microprocessors
- Powerful OS
  Linux + Adaptive AUTOSAR
- High speed networking

Benefits:

- Complexity of centralized implementation is lower compared to distributed functionalities
- No functional dependencies between sensor/actuator ECUs
- Separation of sensor/actuator and advanced vehicle functionalities increases flexibility for adding new features (feature update)

Security and Virtualization

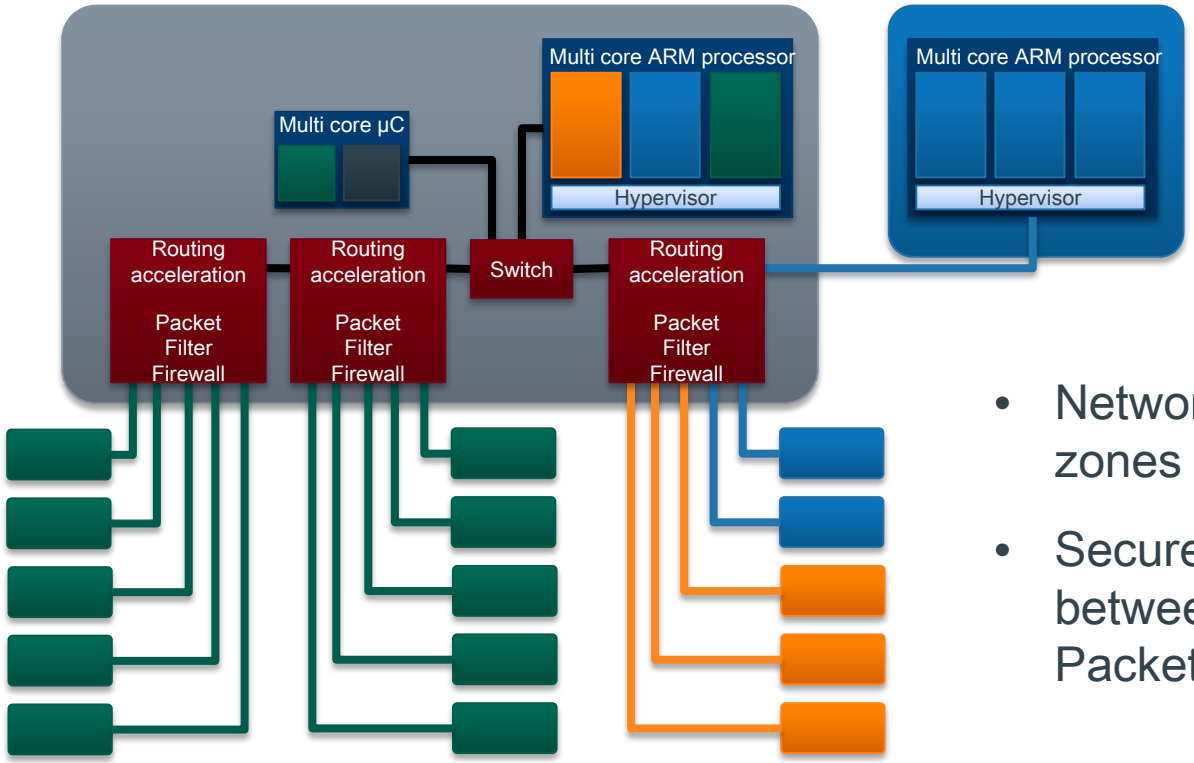

- Network with different security zones realized by VLANs
- Secure routing to communicate between security domains using Packet filter

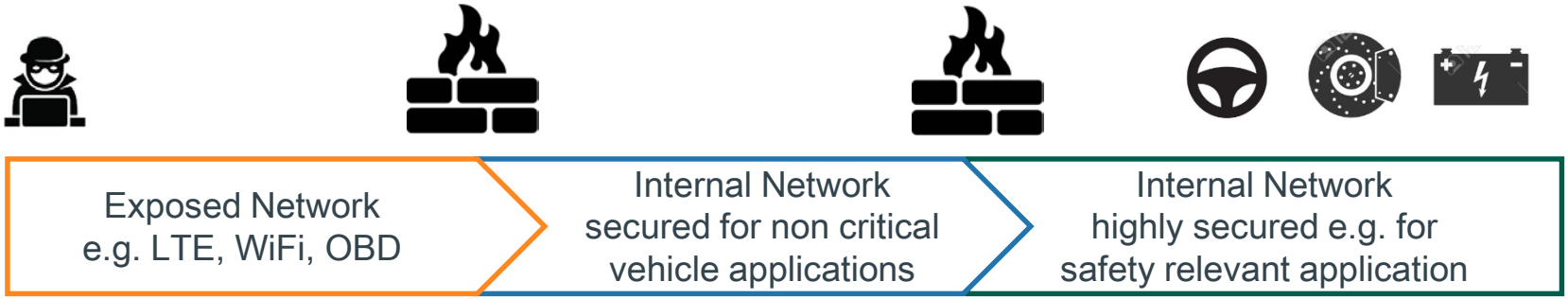

Impact on Network Bandwidth

On some links there is a bandwidth >> 100Mbit/s needed

Solution: Investigate 1000BASE-T1 for these links

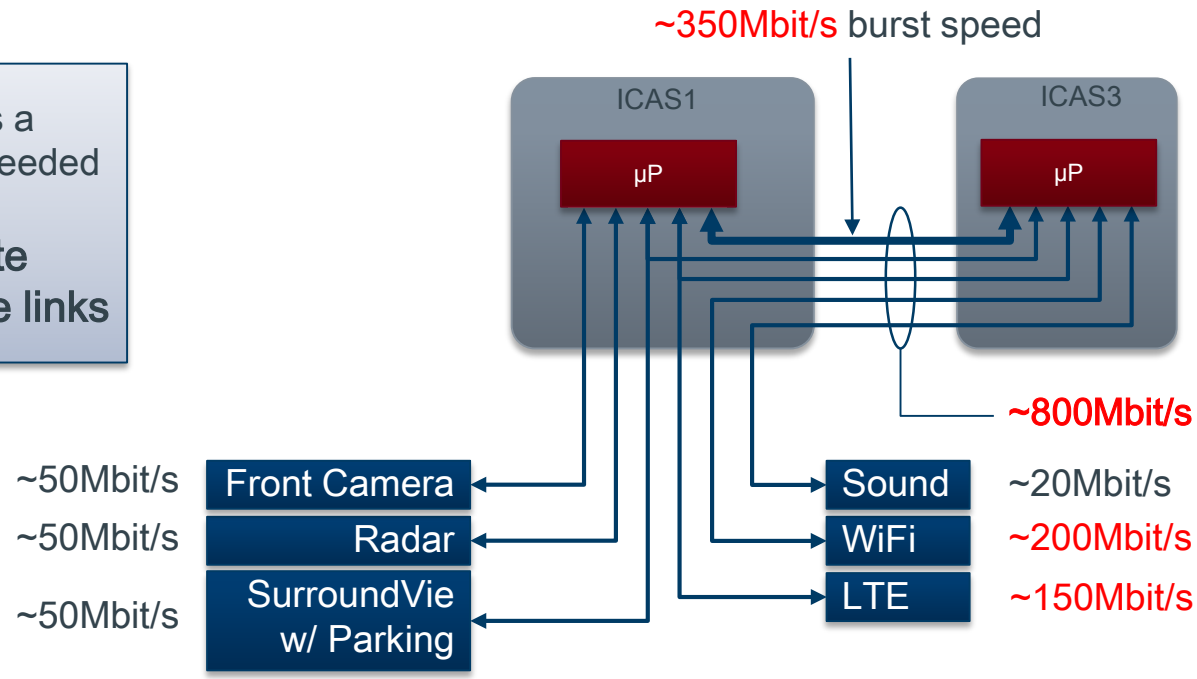

- The new E/E architecture is an enabler for a large number of new functionalities
- Most of the new functions are implemented in the ICAS ECUs
- Features like WiFi and LTE connectivity increases the bandwidth as well as Ethernet-based camera systems and other ADAS Sensors

Qualifying 1000BASE-T1 for use at VW

- Necessary steps:
  - Discussion with IC vendor who already had experience with 1000BASE-T1
  - Validating vendor component level test results
  - Performing VW technology system level tests
  - Decide to use 1000BASE-T1 as the technology meets the requirements
  - Update all necessary test systems including in car logging to 1000BASE-T1

1000BASE-T1 Compliance Testing

- IEEE 802.3bp compliance testing available from UNH
  - 1000BASE-T1 PMA suite available and validated
  - Technology validated using customer development board

- PCS & PHY Control test suite requires additional development
  - In process now

UNH-IOL Automotive Ethernet Consortium

Clause 97 1000BASE-T1 PMA Test Suite v1.0 Report

UNH-IOL — 21 Madbury Road, Suite 100 — Durham, NH 03824 — +1-603-862-0090
Automotive Ethernet Consortium — ethernet@iol.unh.edu — +1-603-862-0203

1000BASE-T1 Robustness Testing

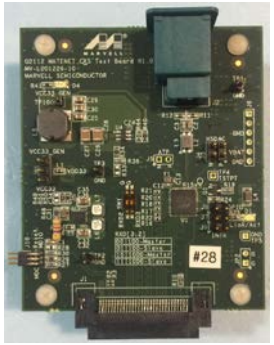

- Internal validation of link-up performed across range of factors

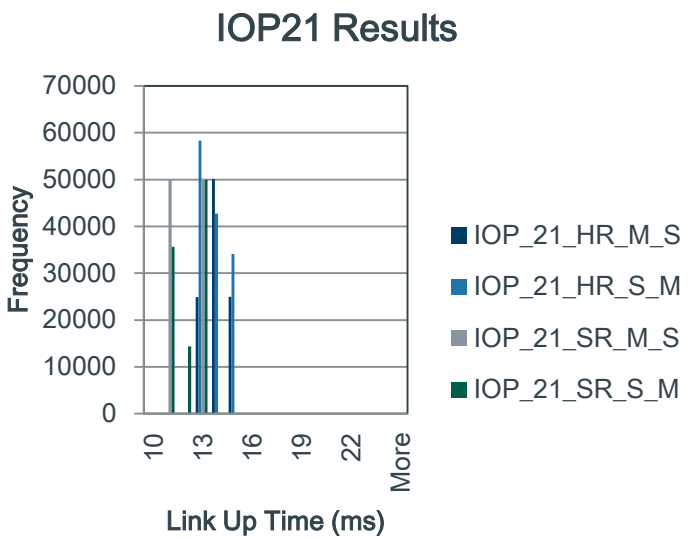

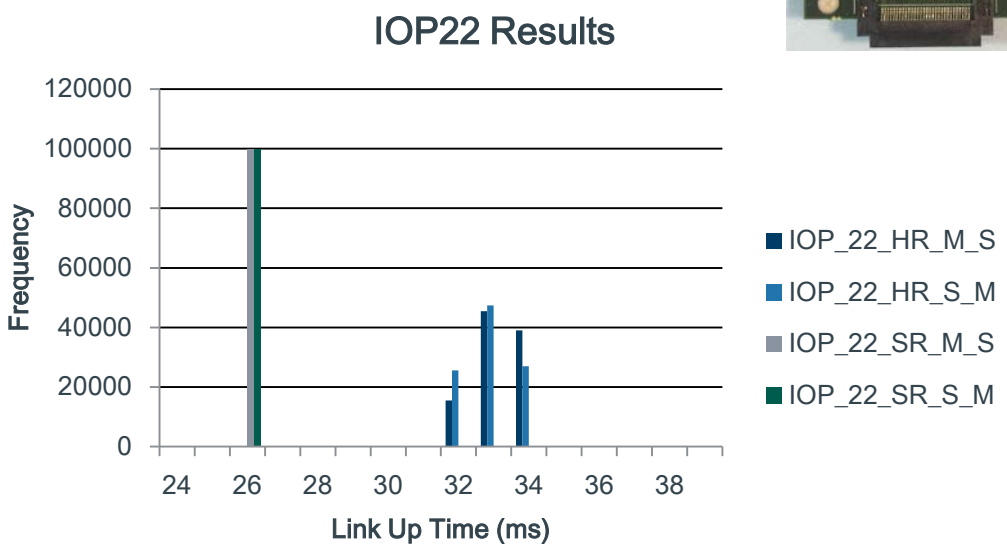

- IEEE 802.3bp interoperability testing available from C&S
  - Test suite available and devices currently going through testing

C & S
communication & systems group

MARVELL

Volkswagen

1000BASE-T1 Eco System

- Eco-system is well established with 3rd party's products available
- Oscilloscope vendors completed integration of 1000BASE-T1 compliance testing

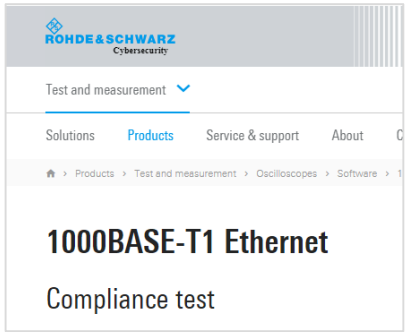

Tools

- 1000BASE-T1 media converters available
  - Intrepid Control Systems
  - Technica Engineering
  - X2E

- 1000BASE-T1 SFP modules available
  - Technica Engineering

Tools

- 1000BASE-T1 options available for protocol analyzers
  - Keysight / IXIA
  - Spirent SmartBits

- Other 3rd party products available covering taps/spy's, analyzers, simulators, data loggers, switches, etc for protocol analysis
  - Telemotive, Vector and others
  - More coming soon!

Vehicle Level EMC Testing

- EMC tests were performed with engineering samples in 2017 and final silicon in 2018
- In vehicle tests followed device level and system level testing

- Early vehicle tests were performed with test ECUs (without functionality) in a similar vehicle with final harness components

Testing / Qualification Results

- During the development numerous tests were performed by the semiconductor vendor and VW
  - Conformance tests
  - Robustness tests
  - EMC tests
  - System level EMC tests
- Wide eco-system of tools and test equipment are available to support development of ECUs with 1000BASE-T1

1000BASE-T1 has been proven to be a robust technology that fulfills VW's automotive requirements

Summary

- The new scalable E/E architecture enables new applications, additional functionality and adaptability
- New architecture requires > 100Mbit/s Ethernet
- 1000BASE-T1 has been tested / validated
- 1000BASE-T1 has been proven to be a robust technology that fulfills VW's automotive requirements
- Solves bandwidth bottlenecks in current and next generation architectures

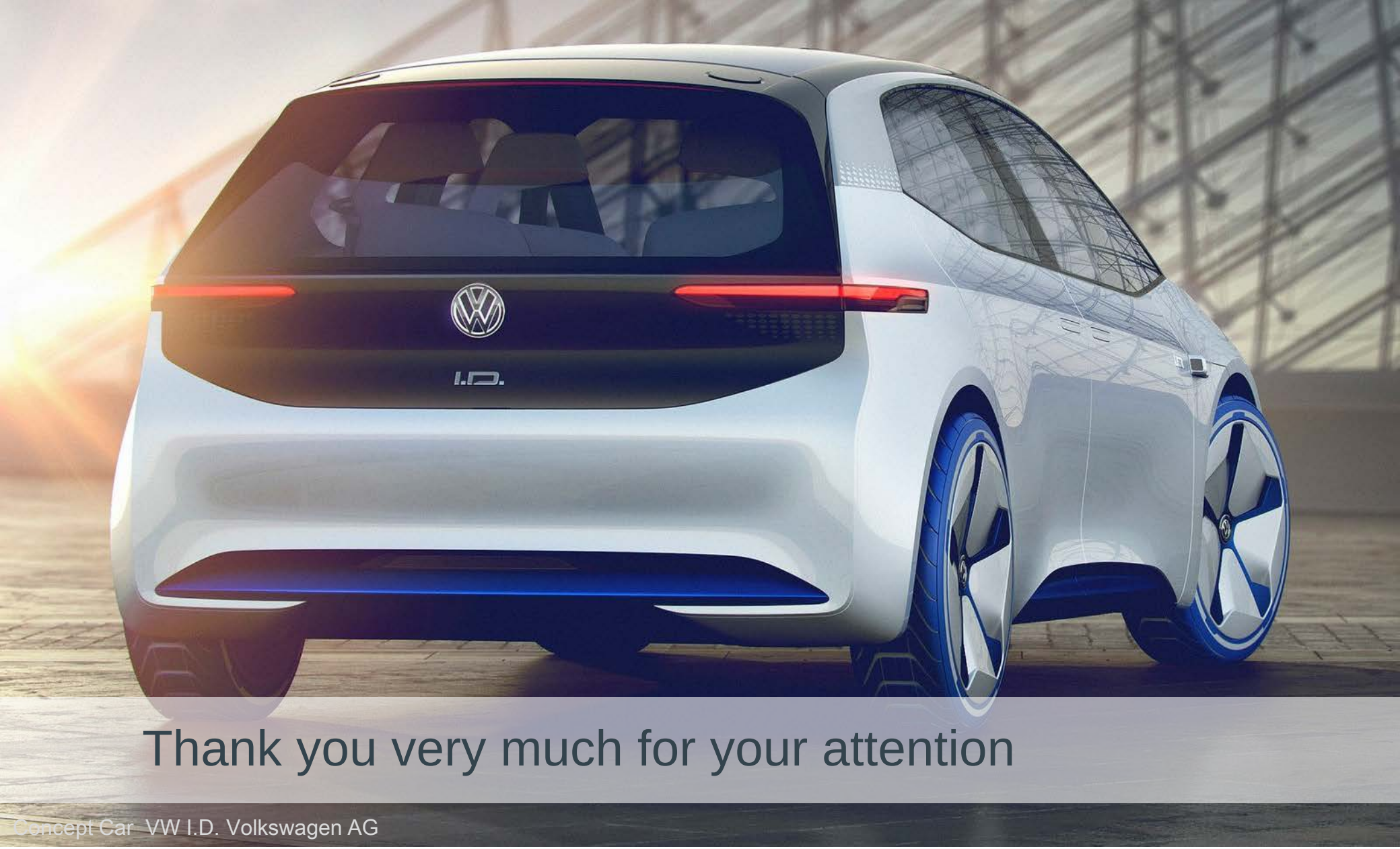

Thank you very much for your attention

Concept Car VW I.D. Volkswagen AG